Narrow Series (AN) Air Conditioners

Proudly Engineered,
Tested / Listed,
and Manufactured
in the USA

VoltAire Systems **AN Series** Air Conditioning Units are designed for high efficiency and high performance heat management of electronic enclosures or equipment.

Standard Features

- UL 484 Listed
- UL Type 4 Enclosure Listed
- RoHS Compliant
- High efficiency rotary compressor
- Coated condenser coil
- R134a refrigerant for high ambient operation
- GR487 compliant
- Low ambient cooling/head pressure control
- Acrylume corrosion resistant cabinet
- Stainless steel exterior hardware
- Stainless steel base and evaporator pan
- Sloped top
- 6' power cord with plug
- Electrical system with standard off-the-shelf components found at most HVAC parts stores
- Temperature control board with LED status lights, adjustable settings for temperatures, alarms, self-test, and remote temperature sensor

Website:
www.voltairesys.com

Phone:
(407) 378-7482

Address:
2900 W. Orange Ave. Ste. 100
Apopka, FL 32703

VoltAire Doc. #CC0119C
Published: January 31, 2020

Optional Features

- Evaporator side heater element: 500W, 750W, or 1000W
- Condenser fan intake filter
- Custom paint finishes
- Stainless steel enclosure (Type 4X Enclosure)
- Ethernet controller with digital display

Applications

- Radio base stations
- Telecom shelters and indoor / outdoor OSP cabinets
- Network switching rooms and computer rooms
- Automation control cabinets, process control centers
- CNC machines
- Drive cabinets
- Digital advertisement boards, kiosk display systems
- Power supply cabinets, battery cabinets and rectifier cabinets

Technical Data

Model	AN01		AN02		AN04		AN06		AN08	
Performance at 131ºF / 131ºF										
Nominal Capacity (BTU)	1,000		2,000*		4,000		6,000		8,000	
Operation Range (ºF / ºC)	-40 to 131* / -40 to 55									
Electrical Data										
Voltage Input (VAC)	115	230	115	230	115	230	115	230	115	230
MCA (Amps)	3.8	2.3	5.1	3.1	15.0**	5.3	10.2	7.7	16.4	8.7
Unit Dimensions										
Height (in/mm)	15.8/400		20.4 / 518		30.0 / 762		32.9 / 836		44.0 / 1118	
Width (in/mm)	7.7/194		10.4 / 264		14.1 / 358		14.1 / 358		14.1 / 358	
Depth (in/mm)	10.0/254		10.0 / 254		12.3 / 312		12.3 / 312		12.3 / 312	
Weight (lbs/kg)	30.0/13.6		36.8 / 16.7		65.6 / 29.7		74.7 / 33.9		84.7 / 38.4	
Approvals										
c UL us	UL 484 and Type 4 (X)								RoHS 2002/95/EC	

* AN02 @ 122F/122F
** Reciprocating Compressor

Website:
www.voltairesys.com

Phone:
(407) 378-7482

Address:
2900 W. Orange Ave. Ste. 100
Apopka, FL 32703

VoltAire Doc. #CC0119C
Published: January 31, 2020

Product Nomenclature

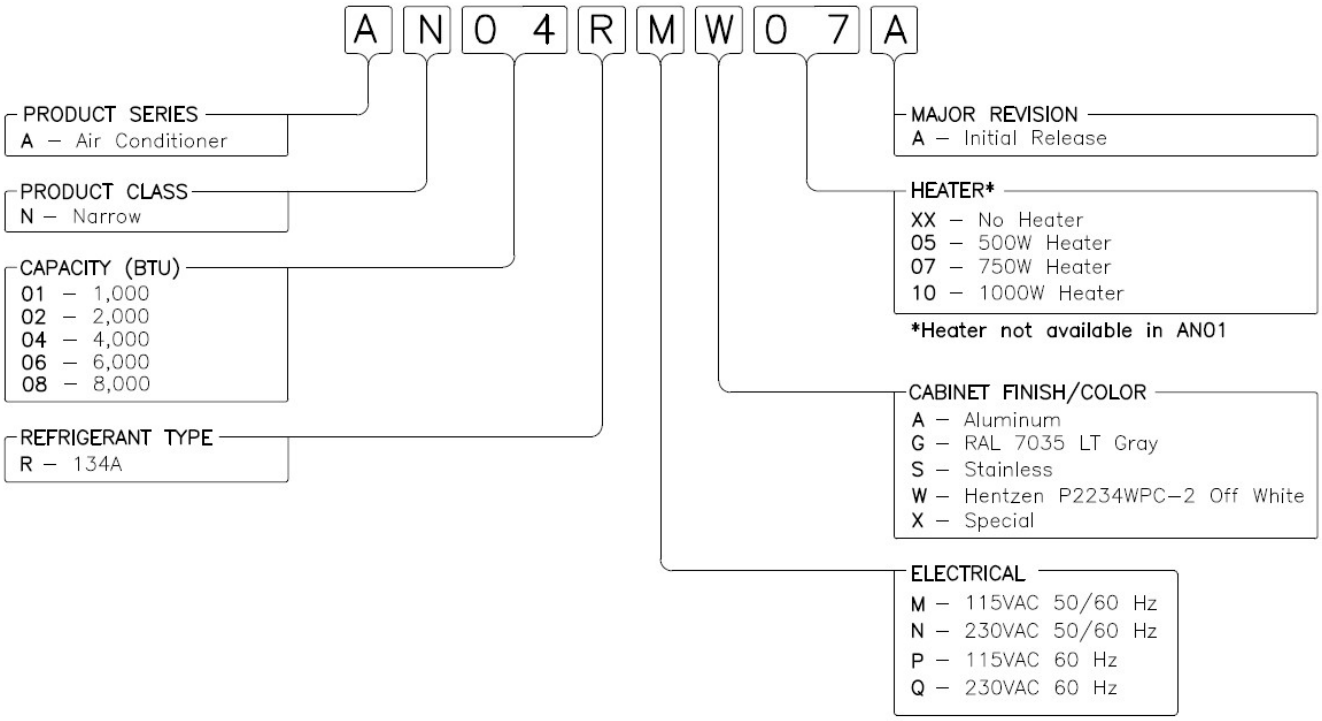

Mounting Diagrams – Overall Dimensions and Cabinet Cutouts

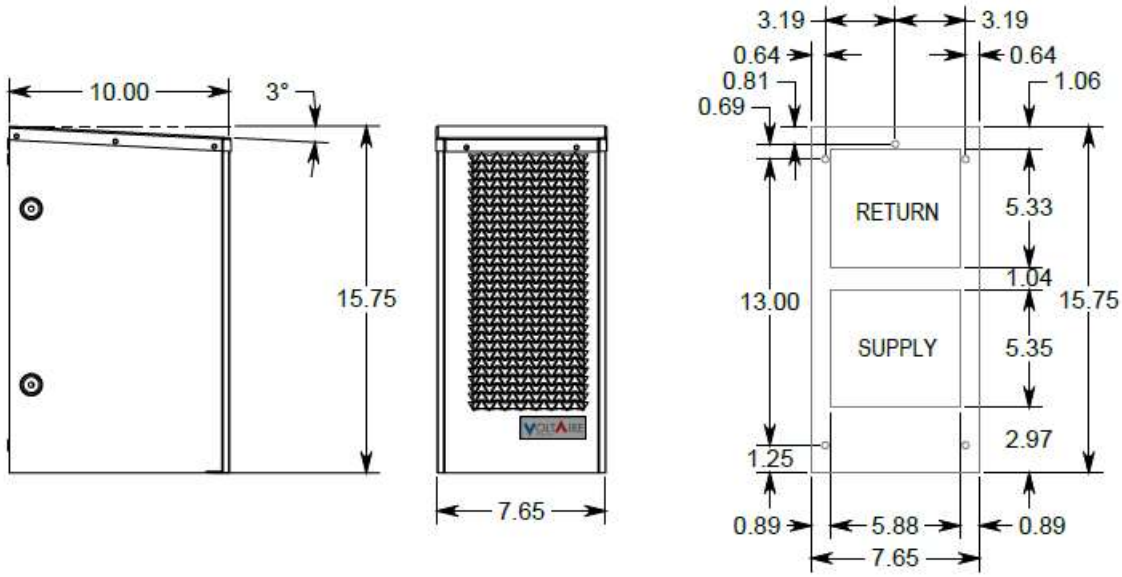

AN01

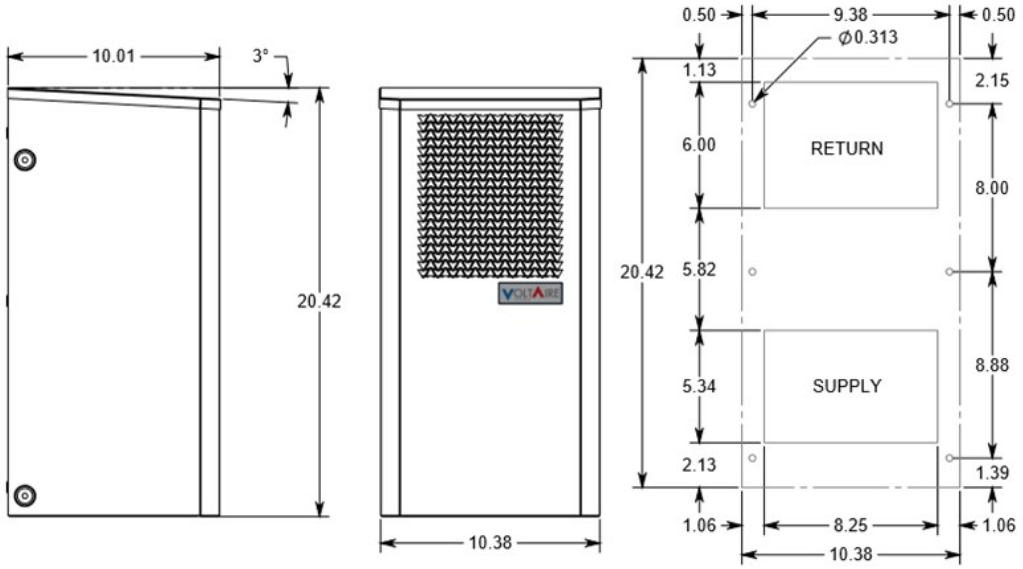
10.01
3°
20.42
10.38
0.50
9.38
0.50
Ø0.313
1.13
2.15
6.00
RETURN
8.00
20.42
5.82
5.34
SUPPLY
8.88
2.13
1.39
1.06
8.25
1.06
10.38

AN02

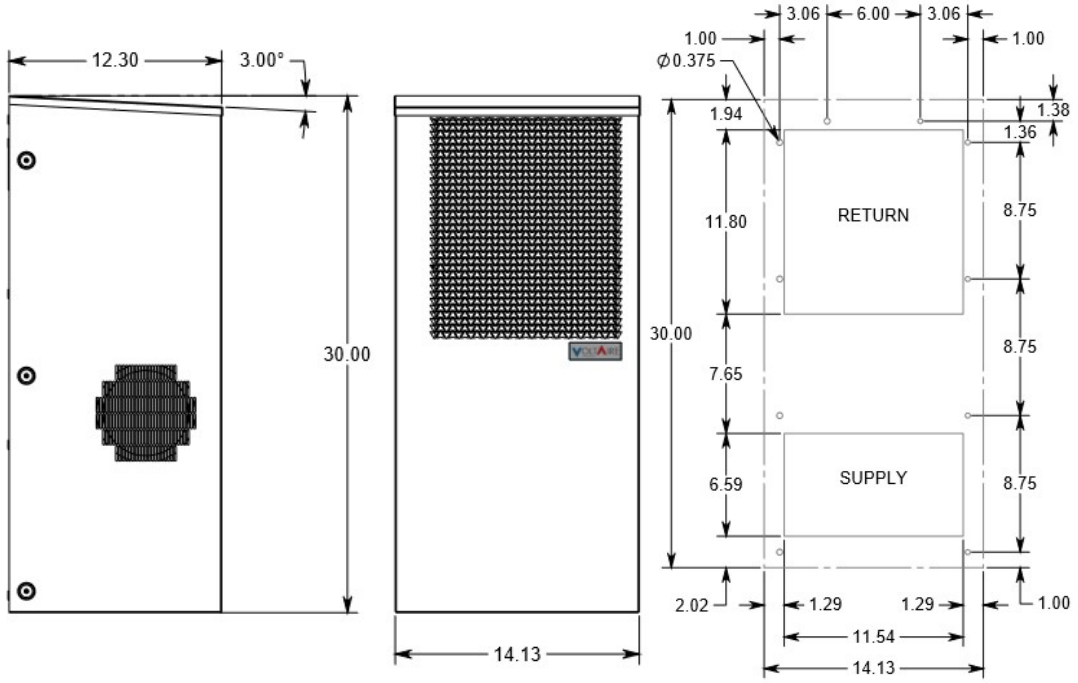
12.30
3.00°
30.00
14.13
3.06
6.00
3.06
1.00
1.00
Ø0.375
1.94
1.38
1.36
11.80
RETURN
8.75
30.00
8.75
7.65
6.59
SUPPLY
8.75
2.02
1.29
1.29
1.00
11.54
14.13

AN04

Contact VoltAire for New Dimensions

AN06

Contact VoltAire for New Dimensions

AN08

Website:
www.voltairesys.com

Phone:
(407) 378-7482

Address:
2900 W. Orange Ave. Ste. 100
Apopka, FL 32703

VoltAire Doc. #CC0119C
Published: January 31, 2020

Performance

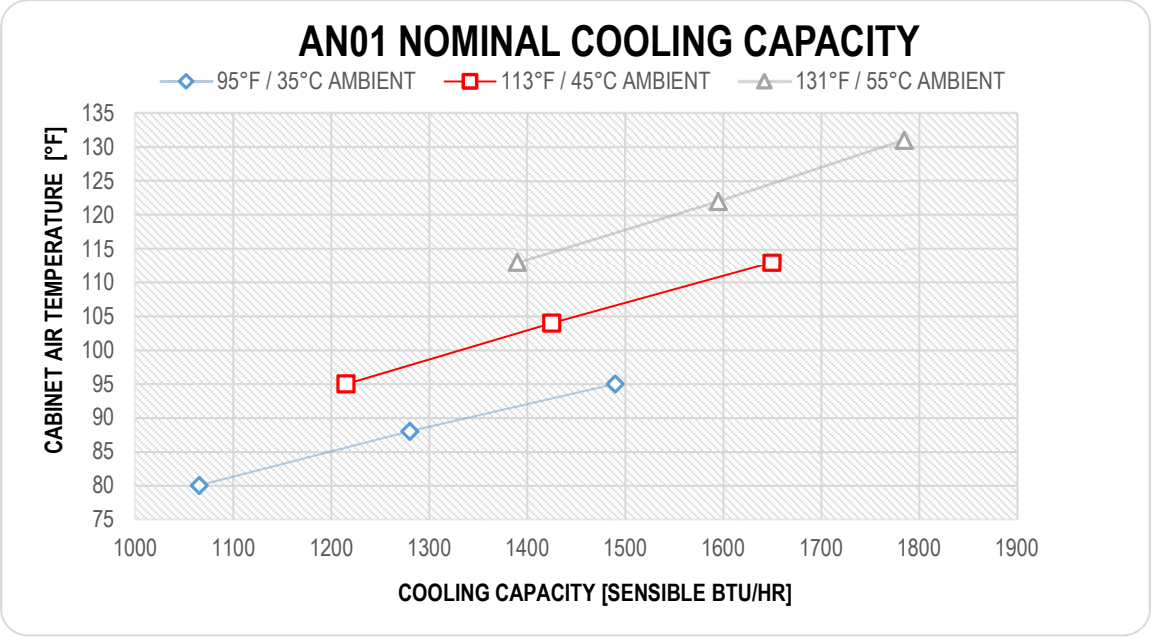

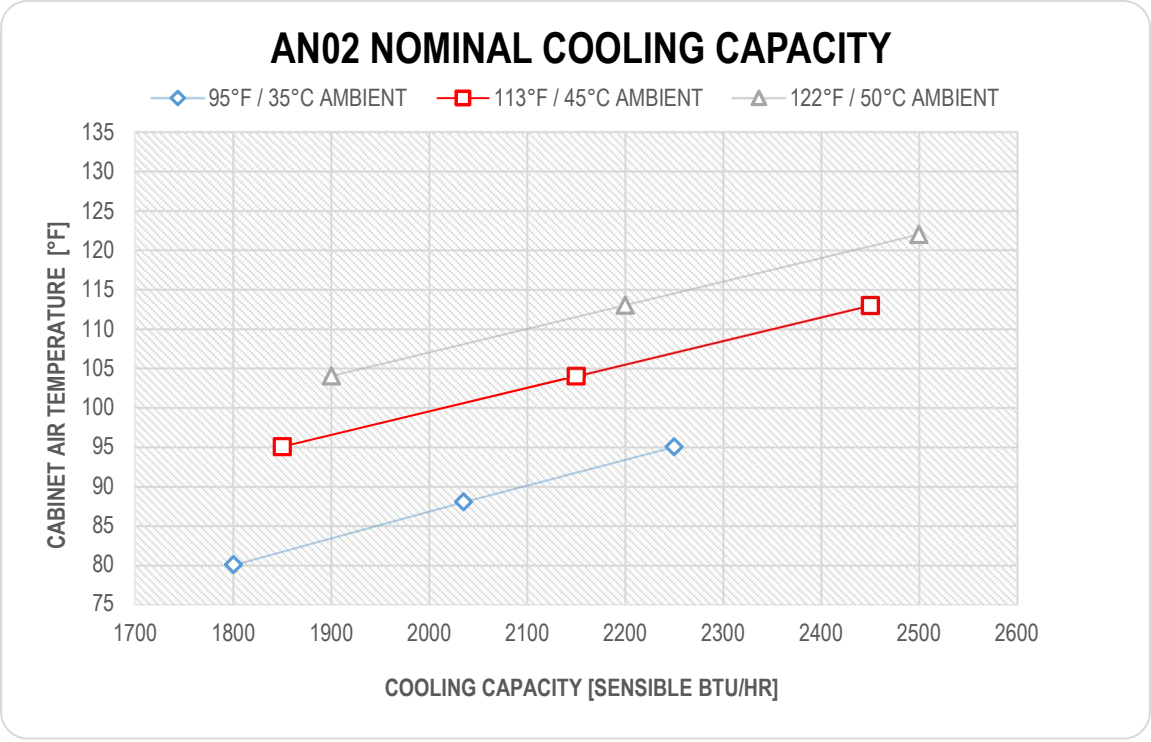

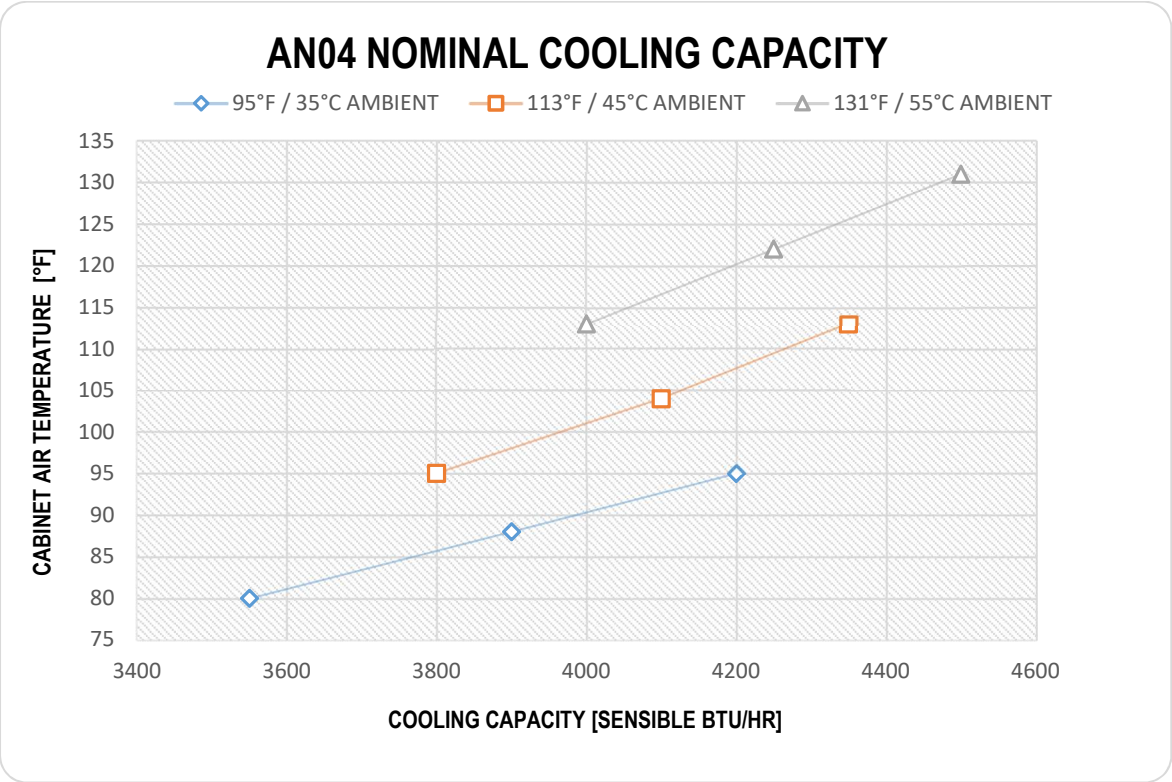
AN04 NOMINAL COOLING CAPACITY
95°F / 35°C AMBIENT
113°F / 45°C AMBIENT
131°F / 55°C AMBIENT
CABINET AIR TEMPERATURE [°F]
135
130
125
120
115
110
105
100
95
90
85
80
75
3400
3600
3800
4000
4200
4400
4600
COOLING CAPACITY [SENSIBLE BTU/HR]

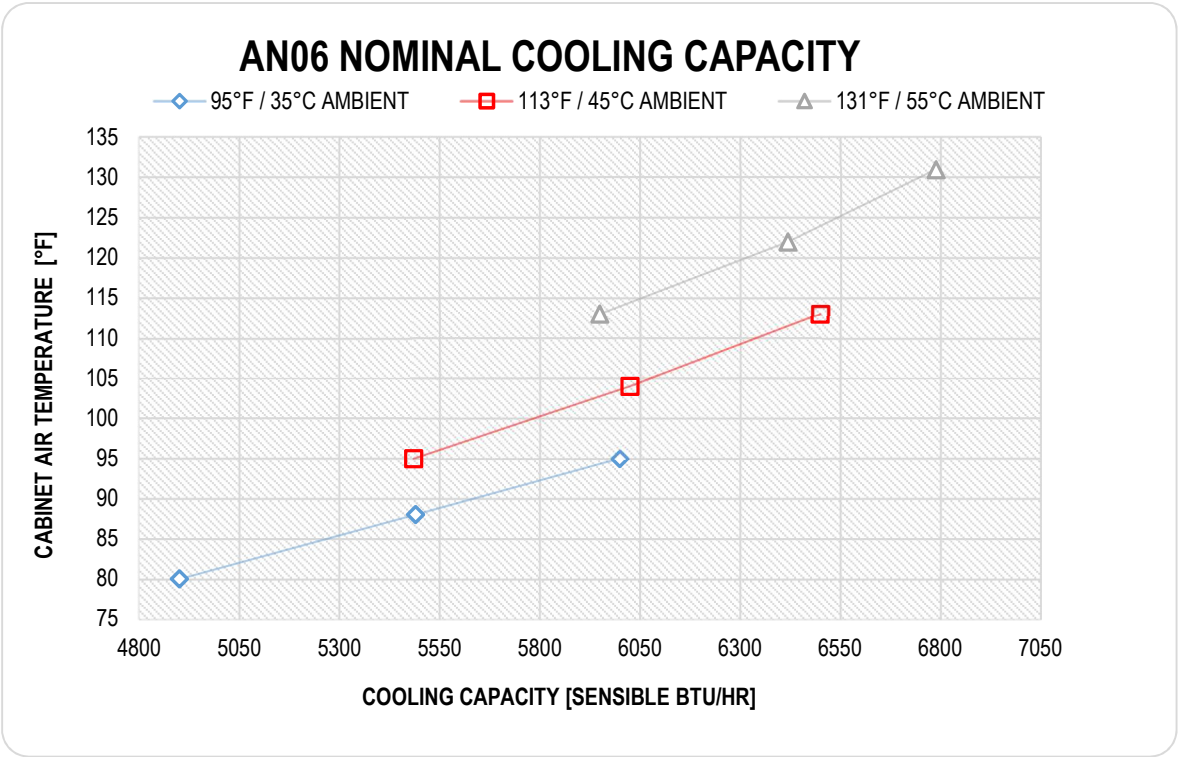
AN06 NOMINAL COOLING CAPACITY
95°F / 35°C AMBIENT
113°F / 45°C AMBIENT
131°F / 55°C AMBIENT
CABINET AIR TEMPERATURE [°F]
135
130
125
120
115
110
105
100
95
90
85
80
75
4800
5050
5300
5550
5800
6050
6300
6550
6800
7050
COOLING CAPACITY [SENSIBLE BTU/HR]

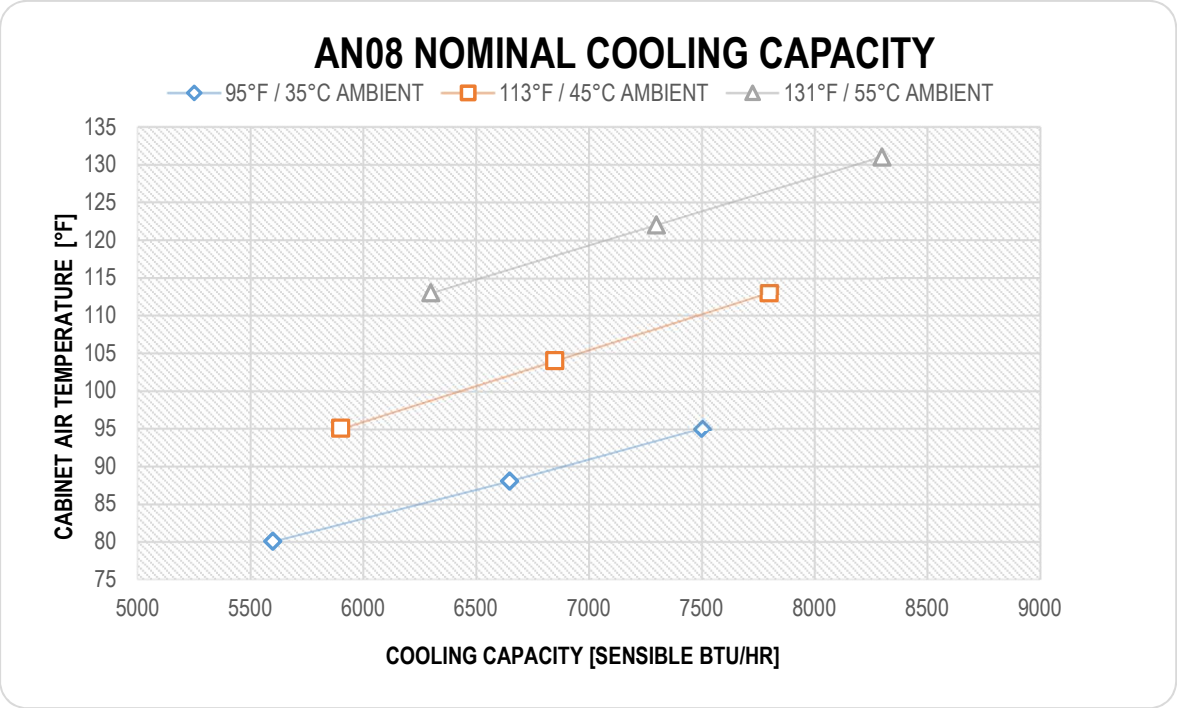
AN08 NOMINAL COOLING CAPACITY
95°F / 35°C AMBIENT
113°F / 45°C AMBIENT
131°F / 55°C AMBIENT
CABINET AIR TEMPERATURE [°F]
135
130
125
120
115
110
105
100
95
90
85
80
75
5000
5500
6000
6500
7000
7500
8000
8500
9000
COOLING CAPACITY [SENSIBLE BTU/HR]